CSIRO hydrocarbon sensor array Mission Plan for Block MC252 spill monitoring

Aims

To perform continuous transects monitoring of the surface coastal waters parallel to the Mississippi, Alabama and North Western Floridian coastline using the CSIRO hydrocarbon sensors array to determine and map hydrocarbon levels in the surface waters associated with the Block MC252 oil spill.

Background

There are currently a number of commercially available hydrocarbon sensors for varied applications. These devices use a number of detection strategies and vary in detection limits, response times and sensitivity to different hydrocarbon compound classes. These instruments have the potential to provide timely and specific information on the hydrocarbons present in marine waters allowing suitable water samples to be taken. CSIRO has developed a hydrocarbon sensor array that can produce real time results and allow timely samples to be taken for further analysis by additional sensor instrumentation and traditional analytical techniques. This system is in the early phases of development and as such whilst every effort will be made to validate the data the data produced it should be treated as research data.

This research project is designed to help BP to develop an understanding of the dissolved hydrocarbons within the water column at the leading edge of the oil slick associated with the block MC252 oil spill. The primary aims are to perform survey transects using the hydrocarbon sensor array developed at CSIRO, in combination with analytical measurement through the use of GCMS. The survey transects will primarily focus on the leading edge of the slick and obtain occasional vertical profiles through the water column to a depth of up to 150m in order to map the hydrocarbon content within the surface layers of the waters of the Gulf of Mexico.

The new data derived through this study combined with current knowledge will inform choices on further analyses and/or strategies to be employed by BP and will allow rapid assessment of the geographical extent of dissolved hydrocarbons in the water column.

Operational plan

The survey vessel to be used to perform this work is the Ryan Chouest an oil service workboat. It is anticipated that the vessel will depart from Port Fouchon on Saturday 5th June. Initially the Ryan Chouest will transit from Port Fouchon to Theodore, running only four un-calibrated hydrocarbon sensors in a flow through surface sampling mode only (as a shake out trial and also so that all the calibrations of additional instrumentation may be performed). The transit will pass across the mouth of the Mississippi and parallel to the Chandelier islands at a rate of between 4-5 knots. The anticipated arrival time

in Theodore is Monday 7th June. In Theodore additional supplies, parts and personnel will be loaded allowing greater flexibility in the cruise plans.

Several possible survey options then are proposed and these will be instigated or adapted based on the prevailing conditions and slick characteristics within the Gulf of Mexico.

Operational control
This document provides the basis of planned activities. All strategic and program level changes will be in the form of amendments or additions to this document which will be provided by UAC Robert. Operational control instructions will be provided by the IMT Houston.

Option 1

Area of operations (Green dashed line, Figure 1)
30º0'0"N to 29º0'0"N
89º15'0"W to 87º15'0"W

Figure 1. Possible survey area proposed in survey option 1

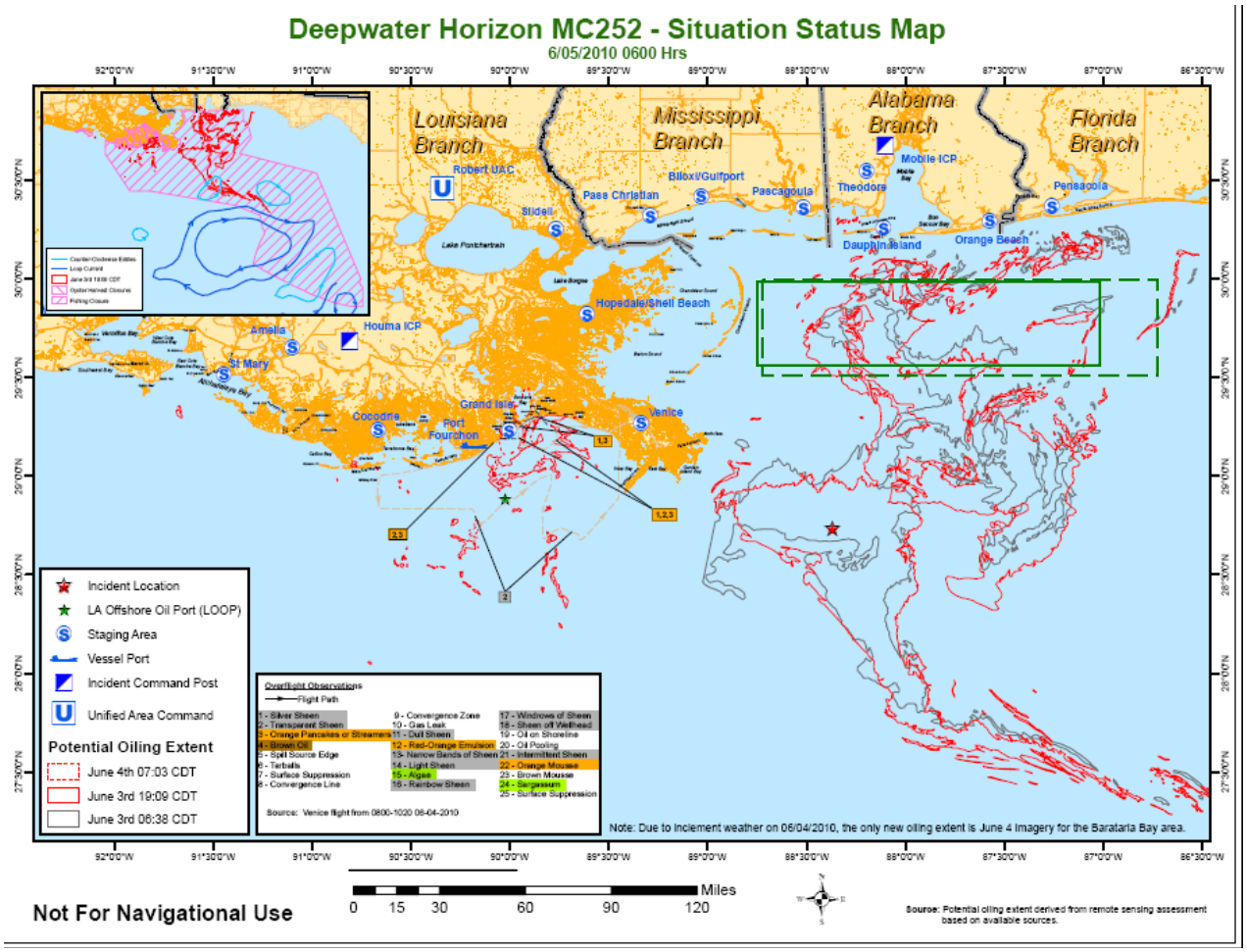

Survey parameters

- Survey box of 2 x 120 miles parallel to the coast with 2 x 30 mile wide sides (300 mile perimeter) as shown by the solid green box in Figure 1
- All surveying transects to take place at approximately 4 knots (while not on vertical profile station) = 65 hours
- Survey transect to use the strategy shown in figure 2
- 30 x vertical profiles on station for 1 hour per profile (30 hours)
    - Each vertical profile will take 3 discrete samples for second tank sensor analysis and GCMS analysis. One of these samples will always been taken at or near the surface.
    - Two other sample depths will include either; 25m, 50m, 75m, 100m, 150m or samples within anomalies.
- In total each circuit of the survey box will take 95 hours (~4 days)
- An additional circuit of box towing the sampling pump at depth 150 m to further characterise the lower surface waters will take an additional 65 hours
- Alternatively selected deep tows and additional vertical profiles can be performed in particular areas of interest on an *ad-hoc* basis

Figure 2. Generalised schematic of survey box strategy

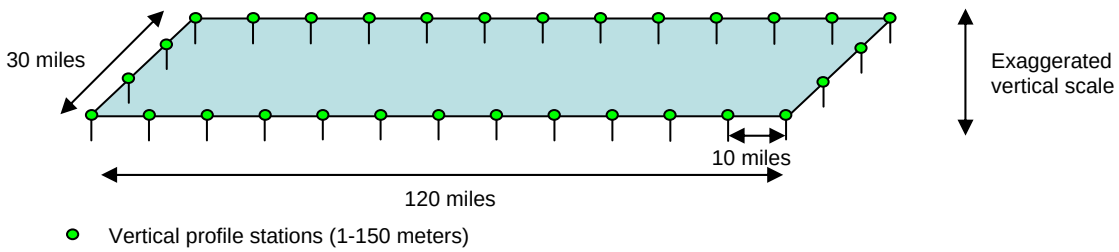

<u>Option 2</u>

Loop current Area of operations
28º45’0”N to 26º45’0”N
86º30’0”W to 86º0’0”W

Survey parameters

- Survey box of 2 x 120 miles North-South with 2 x 30 mile wide sides (300 mile perimeter) as shown by the solid green box in Figure 3
- All surveying transects to take place at approximately 4 knots (while not on vertical profile station) = 65 hours
- Survey transect to use the strategy shown in figure 2
- 30 x vertical profiles on station for 1 hour per profile (30 hours)
    - Each vertical profile will take 3 discrete samples for second tank sensor analysis and GCMS analysis. One of these samples will always been taken at or near the surface.

- Two other sample depths will include either; 25m, 50m, 75m, 100m, 150m or samples within anomalies.

- In total each circuit of the survey box will take 95 hours (~4 days)
- An additional circuit of box towing the sampling pump at depth (1to further characterise the lower surface waters will take an additional 65 hours
- Alternatively selected deep tows and additional vertical profiles can be performed in particular areas of interest on an *ad-hoc* basis

Figure 3 Possible survey area for option 2

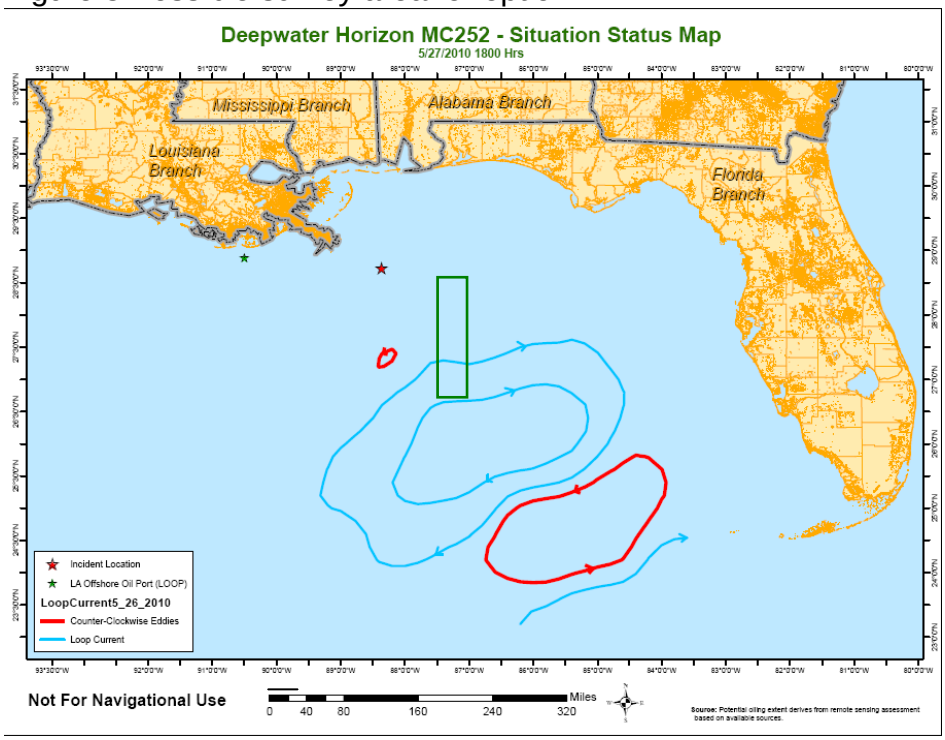

Options 3a and 3 b

Moving overprint of option 1 or 2 survey box with a 15 mile offset towards the in the southerly direction for option 1 survey area or to the west for option 2 survey area.

Option 4

Single line transect at 150-200m contour along selected segments or all of the Mississippi Alabama Florida Coastline. Notional time estimate 8-10 days

Notional timeline

Saturday	Sunday	Monday	Tuesday	Wednesday	Thursday	Friday
05/06/10	**06/06/10**	**07/06/10**	**08/06/10**	**09/06/10**	**10/06/10**	**11/06/10**
Transit to option Theodore with underway system	Transit to option Theodore with underway system	Loading Theodore	Option 1 survey area	Option 1 survey area	Option 1 survey area	Option 1 survey area

operational	operational					
Saturday	Sunday	Monday	Tuesday	Wednesday	Thursday	Friday
12/06/10	**13/06/10**	**14/06/10**	**15/06/10**	**16/06/10**	**17/06/10**	**18/06/10**
Transit to option 2 survey area	Option 2 survey area	Option 2 survey area	Option 2 survey area	Option 2 survey area	Transit to option 3a survey area via Theodore to drop off personnel	Option 3a survey area
Saturday	Sunday	Monday	Tuesday	Wednesday	Thursday	Friday
19/06/10	**20/06/10**	**21/06/10**	**22/06/10**	**23/06/10**	**24/06/10**	**25/06/10**
Option 3a survey area	Option 3a survey area	Option 3a survey area				

Methods and Equipment used

Hydrocarbon sensor array methods

The sensor system comprises an array of three groups of hydrocarbon sensors that target volatile mono-aromatic hydrocarbons and poly-aromatic hydrocarbons at low concentrations, and oil films (Table 1). These sensors are divided between two flow tanks based upon their response time. The primary tank contains rapidly responding sensors (within seconds) whereas the secondary tank contains sensors with response times typically over minutes. The second tank is filled once the primary tank sensors reach a threshold value or can be manually triggered via the user interface. A water sample for conventional chemical analysis is also automatically collected during this operation. The flow tanks are supplied with water via a towed submersible pump connected to the tank by a chemically inert hose. An electrically-actuated valve is used to control water flow between the tanks.

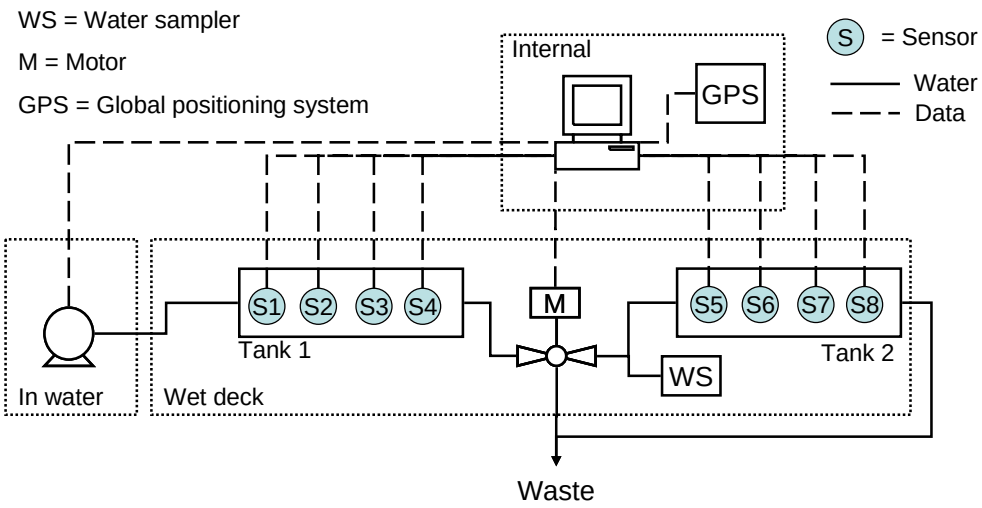

Figure 1. *Simple schematic representation of arrayed hydrocarbon sensor system*

The complete system including, georeferenced datalogging, diagnostics, pump and tank control is operated via an integrated graphic user interface on a laptop which can be situated at a distance from the system which may be operated from deck of the survey vessel.

The sensors are all calibrated in the laboratory following manufacturers specifications. In addition the sensor responses have been characterised for the dissolved hydrocarbons for both oils and commonly occurring contaminants, with the results compared with conventional analytical results. The dissolved hydrocarbons can typically be detected within the ppb range of concentration for the more sensitive instrumentation (Table 1).

Table 1. Hydrocarbon sensor types and attributes

Sensor	S1	S2	S3	S4	S5a, b	S6	S7
Application	PAH in marine waters			BTX in streams & ground water	Volatile hydrocarbons in water		Storage tank fuel alarm
Detection method	Fluorescence based measurement			Semi-conductor with partitioning membrane		Near-IR fibre optic probe	Hydrocarbon-sensitive conductive polymer
Detection limits*	10 ppt	100 ppt	100 ppt	0.5 ppm	0.5 ppm	1 ppm	Surface oil film

* Based on calibrant compounds. Analytes used (carbazole for S1 to S3, Toluene for S4 to S6)

SPE Method for the analysis of Oil and Grease in Water

This Solid Phase Extraction (SPE) method is a modification of the EPA-1664 method. The modifications were made to reduce the volume of toxic solvents (on board a vessel at sea) and to increase the amount of hydrocarbons collected from the water sample.

This SPE method consists of the following:

1. Collecting a 1 L sample of water in a cleaned glass jar, where an SPE cartridge can be fitted.
2. Conditioning of the EnvirElut SPE cartridge (Varian) with isopropyl alcohol
3. Attach the EnvirElut SPE cartridge to the glass sample jar and pass the sample through the SPE cartridge.
4. Dry the EnvirElut SPE cartridge for 10 min.
5. Rinse the AquaSep SPE cartridge (2nd cartridge) with Dichloromethane (DCM).

6. Place the EnvirElut cartridge on top of the AquaSep cartridge and elute with 15 mL of DCM.
7. Collect the sample containing the aliphatic and aromatic hydrocarbons and put in a vial for analysis on a GC-MS

Gas Chromatograph-Mass Spectrometer (GC-MS) method

The GC-MS method is to be used for screening, identification and semi-quantitation of the hydrocarbons extracted by the SPE method in order to validate the hydrocarbon sensor array results.

A liquid aliquot of the sample obtained by the SPE method is injected into a split/splitless injector connected to a DB-5MS (J&W, 60 m, 0.25 mm ID, 0.25 µm film thickness). The temperature program of the GC oven stars at 40 °C with a ramp of 4 °C/min to 310 °C (20 min hold).
The MS is run on scan mode from 10-300 AMU to increase the sensitivity of low to medium molecular weight hydrocarbons which are generally more volatile and are subject to evaporative losses.

Reporting Frequency

Daily pre-survey reports on progress towards commencement of operations with clear definition of start of operation and valid data flow.
Once in operation every 12 hours brief data transmission on commencement of survey, 9 am each day interpreted data transmission and operational report with results of the previous 24 hours of data (including, sensor data, GCMS analysis, relevant photographs and video clips). One page operational report to be included in this report.

Data Format

Underway sensor output: Excel spread sheet with real time sensor raw data output, QC/QA, comments etc.

Vertical profile stations: Real time sensor data raw data down and up data. Appended with excel spreadsheets with GCMS results and slower responding sensors.

Video clips and photography:
Georeferenced and annotated video clips in what format? MPEG?
Georeferenced and annotated photographs in JPG format.